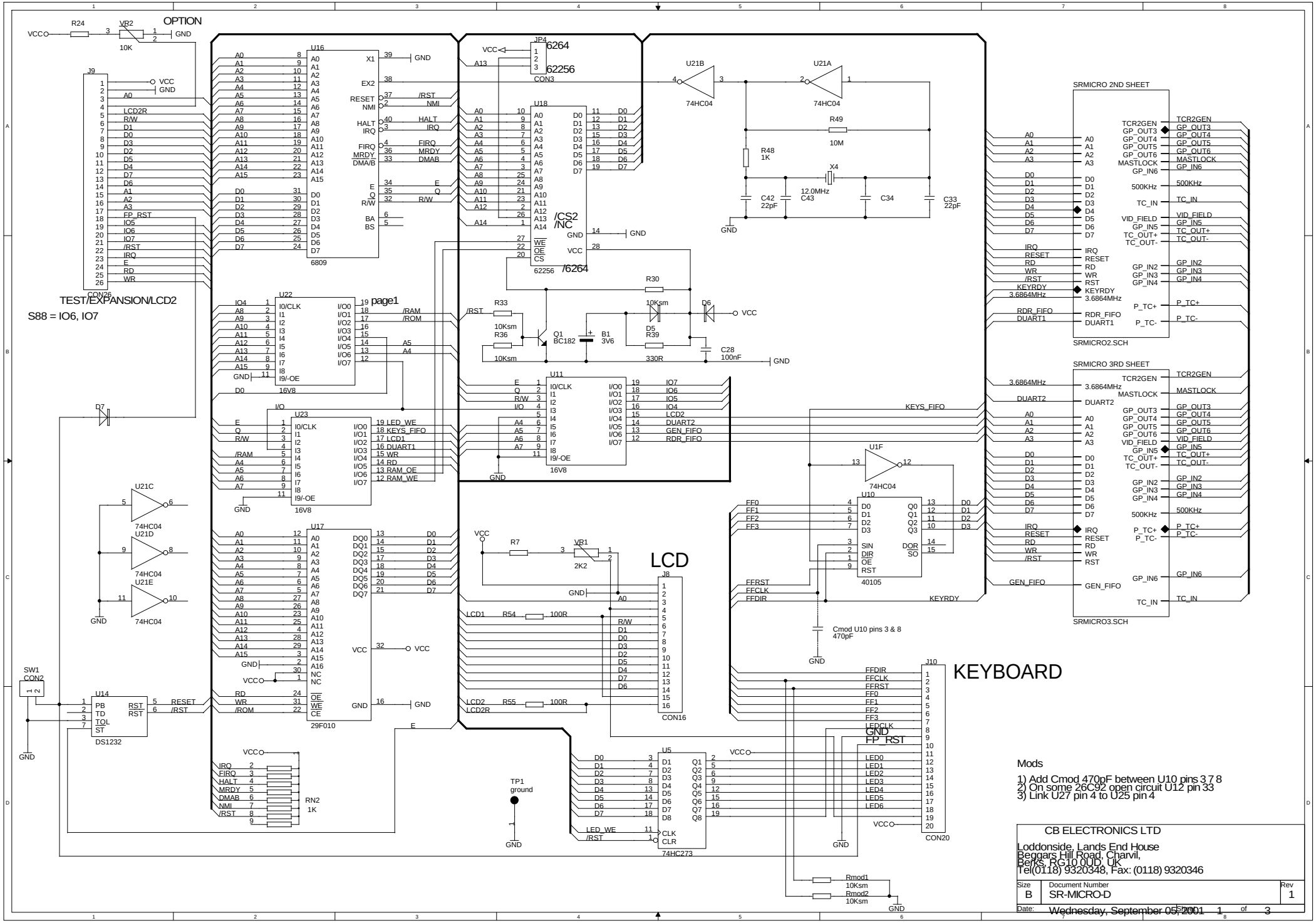


Mods

1) Add Cmod 470pF between U10 pins 3 7 8
2) On some 26C92 open circuit U12 pin 33
3) Link U27 pin 4 to U25 pin 4


CB ELECTRONICS LTD

Loddonside, Lands End House
Beggars Hill Road, Charvil,
Berks, RG10 0UD, UK
Tel(0118) 9320348, Fax: (0118) 9320346


| Size | Document Number | Rev |
|---|---|---|
| B | SR-MICRO-D | 1 |

Date: Wednesday, September 05, 2001 Sheet 1 of 3

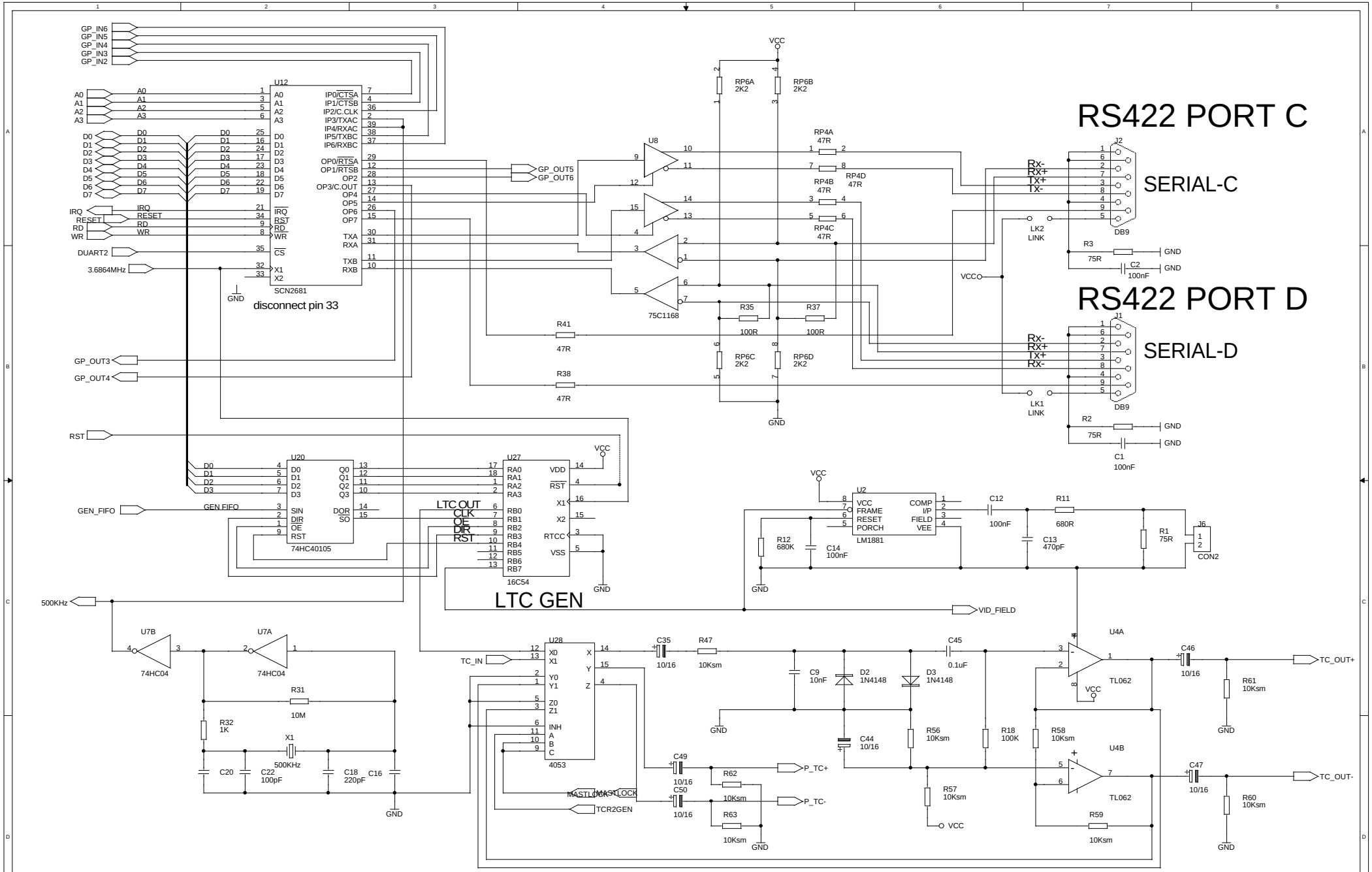


Mod: Disconnect U12 pin 33 and leave open
LINK U28 PIN4 TO U25 PIN4

check both TC_OUT+ and TC_OUT- are connected

| CB ELECTRONICS LTD | | |
|---|---|---|
| Size B | Document Number SRMICRO3 | Rev 1 |
| Date: Wednesday, September 05, 2001 | Sheet 2 of 3 | |

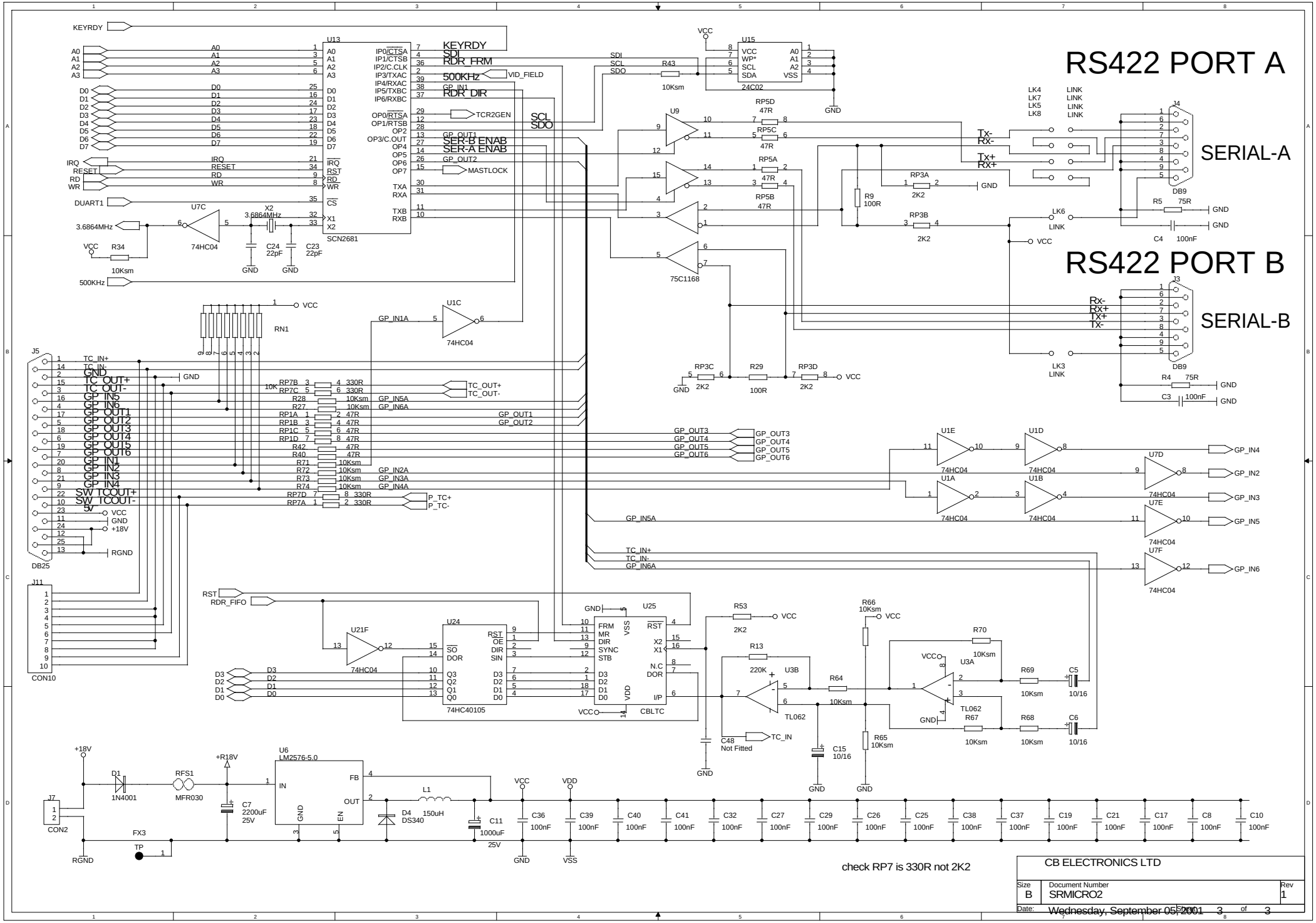
RS422 PORT A
SERIAL-A
RS422 PORT B
SERIAL-B
U13
SCN2681
U15
24C02
U9
75C1168
U1C
74HC04
U7C
74HC04
RN1
J5
DB25
J11
CON10
J4
DB9
J3
DB9
U24
74HC40105
U25
CBLTC
U21F
74HC04
U1E
U1D
U1A
U1B
U7D
U7E
U7F
U3B
TL062
U3A
TL062
U6
LM2576-5.0
J7
CON2
D1
1N4001
RFS1
MFR030
D4
DS340
L1
150uH
C11
1000uF
25V
C7
2200uF
25V
C48
Not Fitted
C15
10/16
C5
10/16
C6
10/16
C4
100nF
C3
100nF
R5
75R
R4
75R
R9
100R
R29
100R
R43
10Ksm
R53
2K2
R13
220K
R64
10Ksm
R65
10Ksm
R66
10Ksm
R70
10Ksm
R69
10Ksm
R68
10Ksm
R67
10Ksm
RP3A
2K2
RP3B
2K2
RP3C
2K2
RP3D
2K2
RP5A
47R
RP5B
47R
RP5C
47R
RP5D
47R
RP7B
RP7C
RP7D
RP7A
330R
RP1A
RP1B
RP1C
RP1D
47R
R28
R27
R42
R40
R71
R72
R73
R74
10Ksm
X2
3.6864MHz
C24
22pF
C23
22pF
R34
10Ksm
FX3
TP
RGND
GND
VCC
VDD
VSS
+18V
+R18V
KEYRDY
SDI
RDR_FRM
500KHz
VID_FIELD
TCR2GEN
SER-B ENAB
SER-A ENAB
MASTLOCK
RDR_DIR
SCL
SDO
TC_OUT+
TC_OUT-
GP_IN1A
GP_IN5A
GP_IN6A
GP_OUT1
GP_OUT2
GP_OUT3
GP_OUT4
GP_OUT5
GP_OUT6
GP_IN2A
GP_IN3A
GP_IN4A
P_TC+
P_TC-
TC_IN+
TC_IN-
TC_IN
GP_IN4
GP_IN2
GP_IN3
GP_IN5
GP_IN6
Tx-
Rx-
Tx+
Rx+
LK4
LK7
LK5
LK8
LK6
LK3
LINK
check RP7 is 330R not 2K2
CB ELECTRONICS LTD
Size
B
Document Number
SRMICRO2
Rev
1
Date:
Wednesday, September 05, 2001
Sheet
3
of
3