CB Electronics
A-Mon
Analogue Monitor Control Unit

User Guide

Preliminary

Contents

INTRODUCTION **1**

INSTALLATION **2**

CONNECTING THE TMC-1 TO A-MON 2

2

3

SYSTEM SETUP **3**

MONITORING OPTIONS 4

OPERATION **5**

TALKBACK **5**

TMC-1 TALKBACK MICROPHONE 6

GPIO **3**

3

USB PORT **7**

CONFIGURATION 7

FIRMWARE UPDATES 7

RECOVERY MODE 7

CB XPAND **8**

XPand External connections *8*

TMC-1 XPand Surround Format Selector *9*

5,1/7.1/7.1.4 *9*

5.1/7.1/9.1.2 *10*

7.1 TO 5.1 SWITCHING 10

SURROUND BASS EXTENSION 10

CONNECTING THE TMC-1 TO A-MON AND XPAND 10

CONNECTING THE TMC-1 TO XMON AND XPAND 11

USING EXISTING AVID CABLE 11

11

12

INTERNAL LINKS 12

GLOSSARY **14**

CB ELECTRONICS **15**

Introduction

The A-Mon analogue monitor control unit is housed in a 1U rack mount box. Designed for stereo, 5.1 and 7.1 this versatile unit corrects some of the problems of the X-Mon and is available as a stand alone unit.

- 6 Inputs: 1 x 7.1/5.1, 1 x 5.1 and 4 x Stereo,
- Input Summing
- 3 outputs: 1 x7.1/5.1, 1x5.1 and 1xStereo
- 3 x Stereo Cue inputs
- 4 x Stereo Cue Outputs: Studio L/S, Headphones and cue 1, cue 2
- 2 x Talkback Mic I/P, 2 x Listen Mic I/P
- Stereo I/P 3 & 4 may be routed to Studio L/S
- Metering selected input(s) or Left, Right, Center, Studio L/S and Headphone
- Rear surround switching for 5.1 or 7.1

Installation

The A-Mon is a 1U rack mounting, care should be taken that it is not mounted in a position where it will overheat.

Connecting the TMC-1 to A-Mon

Connect the TMC-1 to A-Mon using a DDC VGA Cable, a 7.5 meter cable is supplied with the system. Where very long cables are used (>15m) we recommend using a separate Talkback Microphone cable to prevent cross talk between the Mic input and the digital signals resulting in noise on the Talkback feed.

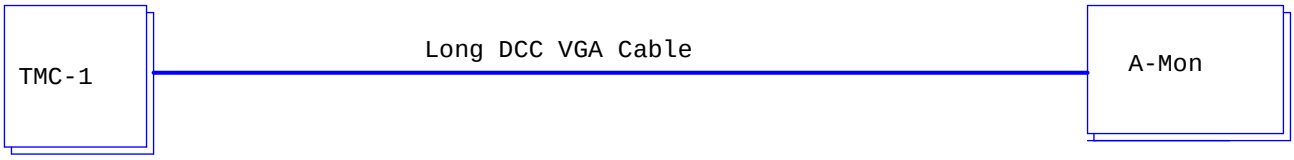

All input and output connections to the A-Mon are made via 25 way 'D' connectors wired to the Tascam standard. All inputs and outputs are electronically balanced.

A-Mon Audio Input/Output Connections

Input Connections (25 'D')							
Channel	**(+)**	**(-)**	**Gnd**	**Stereo 1-4**	**5.1 I/P**	**7,1 I/P**	**T/B L/B Cue I/P**
1	24	12	25	1 Left	5.1 Left	Left	Int. T/B (TMC-1)
2	10	23	11	1 Right	5.1 Right	Right	Ext. Talk/Back
3	21	9	22	2 Left	5.1 Center	Center	Listen/Back 1
4	7	20	8	2 Right	5.1 LFE	LFE	Listen/Back 2
5	18	6	19	3 Left	5.1 Ls	Ls	Cue 1 Left
6	4	17	5	3 Right	5.1 Rs	Rs	Cue 1 Right
7	15	3	16	4 Left	Cue 3 Left	Lb	Cue 2 Left
8	1	14	2	4 Right	Cue 3 Right	Tb	Cue 2 Right
Gnd			13				

Output Connections (25 'D')							
Channel	**(+)**	**(-)**	**Gnd**	**Cue O/Ps**	**Alt/Mini O/P**	**Main O/P**	**GPIO AFL DMix**
1	24	12	25	Cue 1 Left	5.1 Left	Left	AFL Left I/P
2	10	23	11	Cue 1 Right	5.1 Right	Right	AFL Right I/P
3	21	9	22	Cue 2 Left	5.1 Center	Center	DMix Left O/P
4	7	20	8	Cue 2 Right	5.1 LFE	LFE	DMix Right O/P
5	18	6	19	SLS Left	5.1 Ls	Ls	Slate O/P
6	4	17	5	SLS Right	5.1 Rs	Rs	GPIO
7	15	3	16	H/P Left	Mini Left	Lb	GPIO
8	1	14	2	H/P Right	Mini Right	Tb	GPIO
Gnd			13				

DMix Left = L+C(-3dB)+Ls(-3dB)+Lb(-5dB), DMix Right = R+C(-3dB)+Rs(-3dB)+Rb(-5dB),
SLS = Studio Loudspeakers, H/P = Headphones

GPIO

GPIO Connections (25 'D')				
Pin	**Type**	**Function**		
5	GPO 6			
17	GPI/GPO 5			
4	GPI/GPO 4			
16	GPI/GPO 3			
3	GPI/GPO 2			
15	GPI/GPO 1			
2	GPI/GPO 0			
14	GPI 6			
1	GPI 7			
13	Ground			

To Be updated

System Setup

Monitoring Options

The A-Mon provides three options that may only be enabled/ disabled using TMC-1-win or TMC-1-mac via the USB port. By Default all three options are **OFF**.

No LFE: When checked the LFE channel is sent to Left and Right

No Center: When checked the Center channel is send to Left and Right

No Rear Speakers: When enabled the Lb and Rb signals are added to the Ls and Rs.

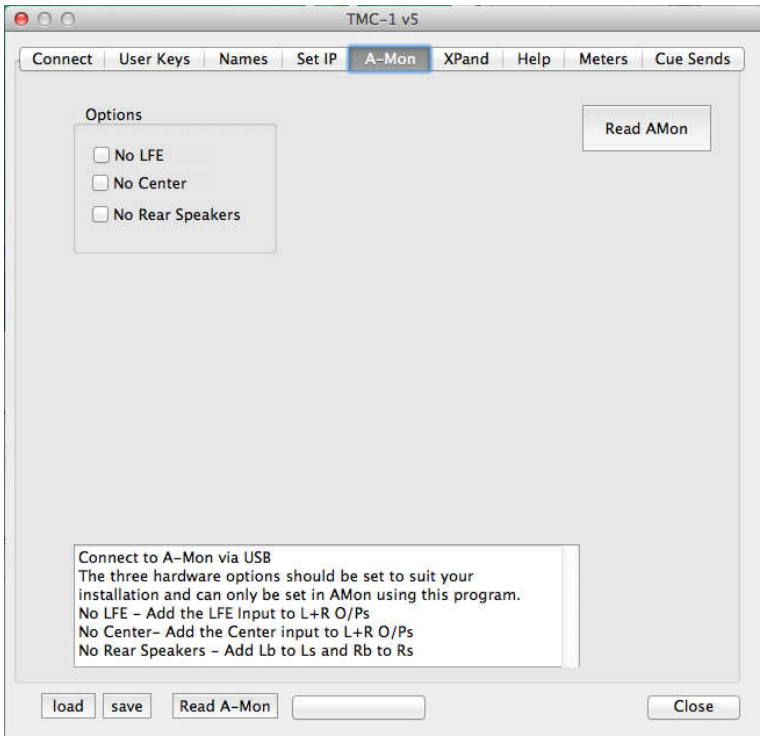

Operation

The A-Mon powers up with hardware mutes activated, depressing the Mute key on the TMC-1 or the Mute key on the A-Mon will disable the Hardware mutes, to enable the Hardware mutes use Ctrl-Mute on the TMC-1 or the Mute key on the A-Mon.

The three LED's on the front of the A-Mon indicate the following

- Power: On when connected to power
- Mute: On when Hardware Mute is activated and ALL inputs and outputs are muted.
- Comms: Indicates communications received from TMC-1. When key is depressed or the knob is turned the LED will flash as the commands are received, otherwise the LED will flash about once a second.
- Mute Switch: Enable/Disable Hardware Mute, the Mute and Un-mute command from the TMC-1 remote will also disable the Hardware Mute.

Read the TMC-1 manual for information on controlling the A-Mon.

Talkback

The A-Mon has two talkback inputs; by default the internal talkback input is connected to the TMC-1 talkback microphone via the HD15 remote connector. The two inputs have individual gain settings that can be adjusted from TMC-1.

The Talkback is enabled by the TMC-1 user keys [T/B 1] and [T/B 2] (internal) and [T/B 1x] and [T/B 2x] (external) which enable talkback microphones. GP Inputs may also be assigned via the menu to enable the internal and external talkback. The two Talkback GP Outputs may be used to drive relays that switch the talkback output destination. T/B 1 and T/B 2 are routed to the 4 cue sends using the TMC-1 cue send enable matrix.

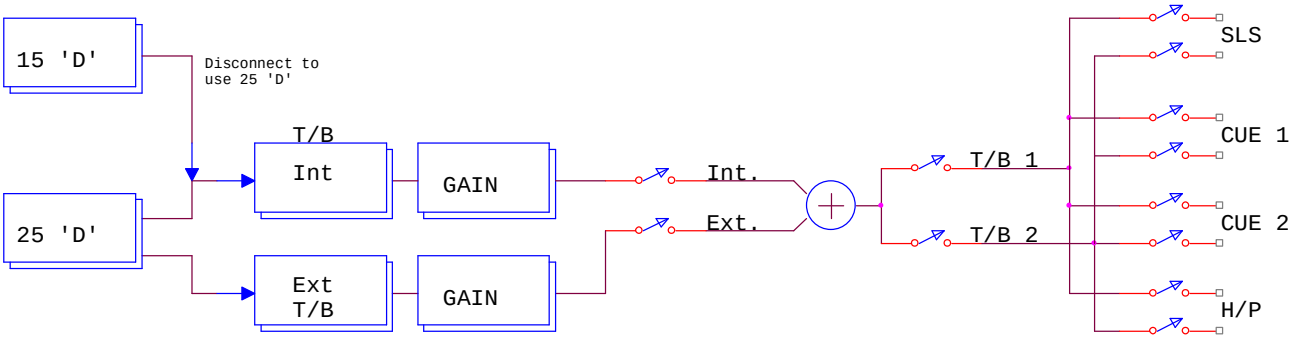

A-Mon Talkback Block System

TMC-1 Talkback Microphone

Both talkback inputs are also connected to the rear panel 25 pin 'D' connector, if you want to replace the TMC-1 microphone with a different microphone connected via the rear panel 25 'D' connector you must disconnect the connection to the HD15 connector by unplugging the 10 way ribbon cable to the talkback input card. Alternatively if you are not using the External microphone input as the producers talkback input you could use the External talkback input.

USB Port

The USB port is used for the following functions

Configuration

Use the TMC-1-mac/win configuration software to set the system options.

Firmware Updates

The USB Port is also used to update the A-Mon firmware. Updates are posted on the A-Mon product page. See the A-Mon Reference and MidiUPD program for more information:

http://www.colinbroad.com/cbsoft/amon/amon.html

The Mute LED is used to indicate the Programming mode as follows

- Mute LED Flashing approximately once per second – Ready to program
- Mute LED Flashing approximately twice per second – Programming
- Mute LED Flashing approximately once per two seconds – Finished programming

Recovery Mode

If for any reason there is a problem when reprogramming (eg. Power Failure whist programming) a recovery mode is provided.

To enter recovery mode, disconnect the power for at least 5 seconds, then reconnect with the Mute key depressed. You will need to reselect the USB port used by MidiUpd.

The Mute LED will flash at approximately 1 second intervals to indicate that the device is ready to program.

CB XPand

The CB XPand converts a 7.1 A-Mon system to a 7.1.4 or 9.1.2 ATMOS system by adding 8 extra channels to your existing system.

XPand External connections

In 8 channel mode up to 16 channels are controlled with individual speaker trim solo and mute.

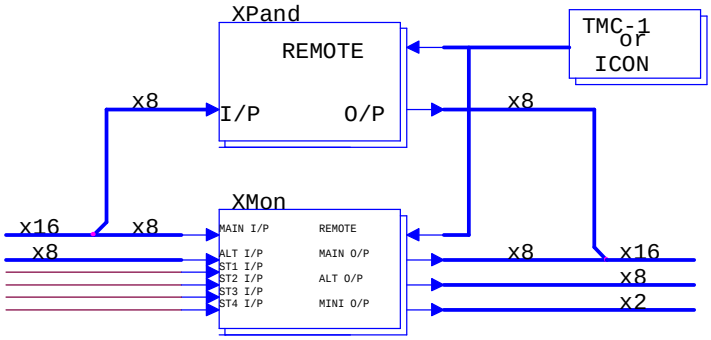

TMC-1 XPand Surround Format Selector

The XPand format may be set via the USB port or from the TMC-1

8 Channel: All 8 channels are used with a common gain control and individual Mute and Gain trim

5.1/7.1/7.1.4 or 51./7.1/9.1.2: Channels 1-4 are used for the for the Atmos Speakers

Channels 5 & 6 ate used for L/R Surround or L/R rear bass extension

Channels 7 & 8 are used for the L/R Rear surround.

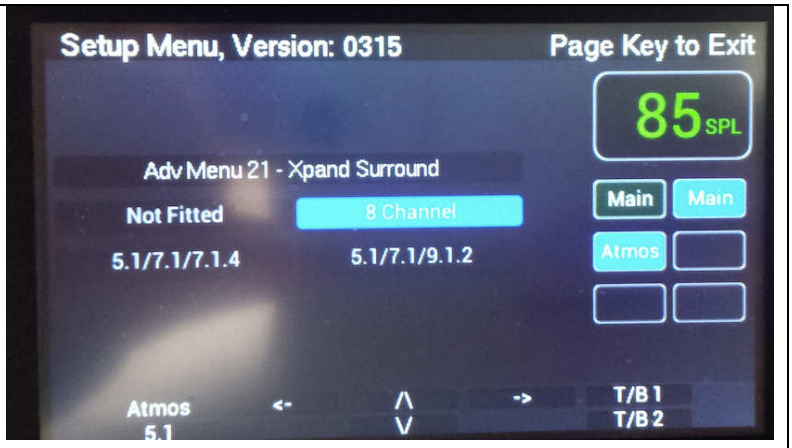

5,1/7.1/7.1.4

Atmos: XPand provides the control for the four ceiling speakers.

Surround Bass Extension: Left and Right sum and low pass of all the surround channels

7.1 to 5.1 Routing: Switch the rear speakers to Ls and Rs for 5.1 (TMC-1 provides the 5.1 gain Trim).

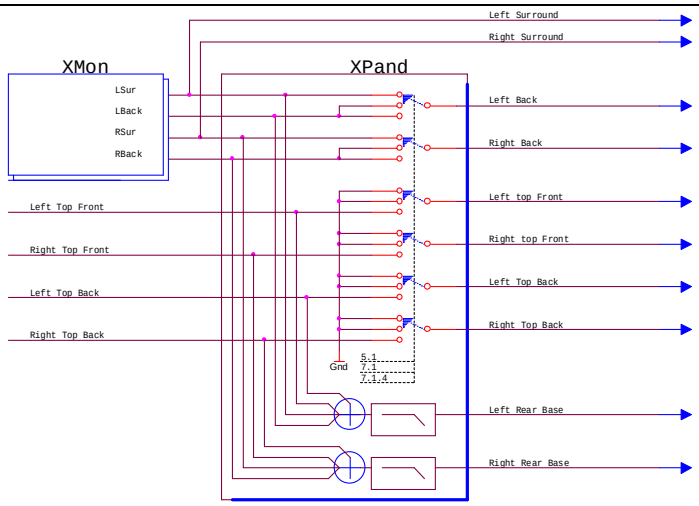

5.1/7.1/9.1.2

Atmos: XPand provides the control for the two ceiling speakers and two front speakers

Surround Bass Extension: Left and Right sum and low pass of all the surround channels.

7.1: XPand switches the Front surrounds to Ls and Rs.

7.1 to 5.1 Routing: Switch the rear speakers to Ls and Rs for 5.1 (TMC-1 provides the 5.1 gain Trim).

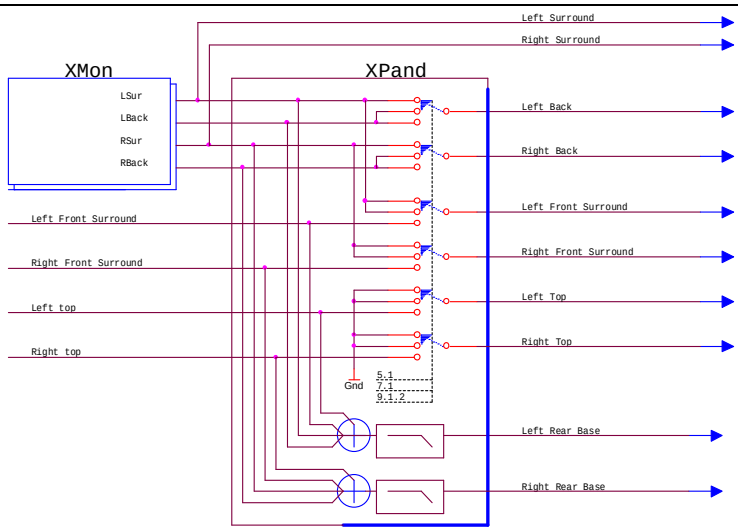

Note: Other combinations may be added at a later date, for example a 9.1.4 system if the rear speaker switching is not required.

7.1 to 5.1 Switching

The XPand provides surround switching between Atmos, 7.1 and 5.1. When switching from 7.1.4 to 5.1 the rear surrounds speakers are connected to the side surrounds. When switching from 9.1.2 to 7.1 the front side speakers are connected to the side surrounds. When switching from 9.1.2 to 5.1 the rear surrounds are connected to the side surrounds.

Surround Bass Extension

Two internal links are used to select outputs 5 and 6 between inputs 5&6 or the sum of the left and right surround channels followed by a low pass filter to provide left and right surround bass extension outputs.

Connecting the TMC-1 to A-Mon and XPand

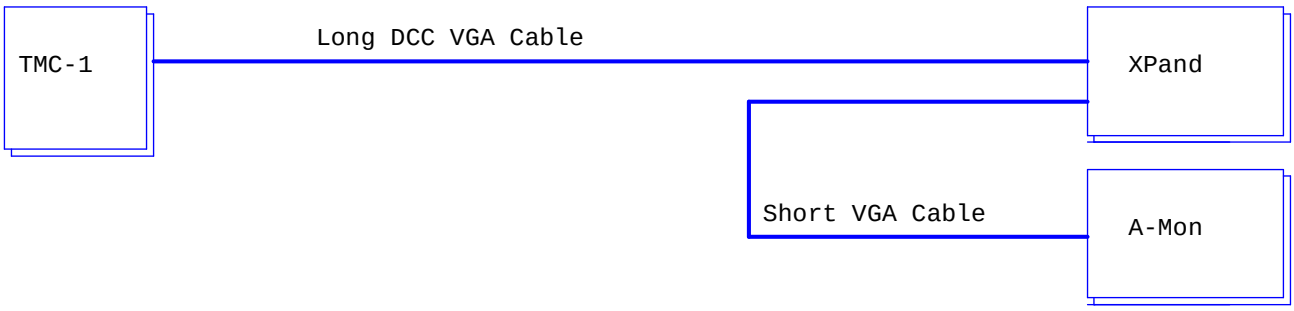

Connecting the TMC-1 to XMon and XPand

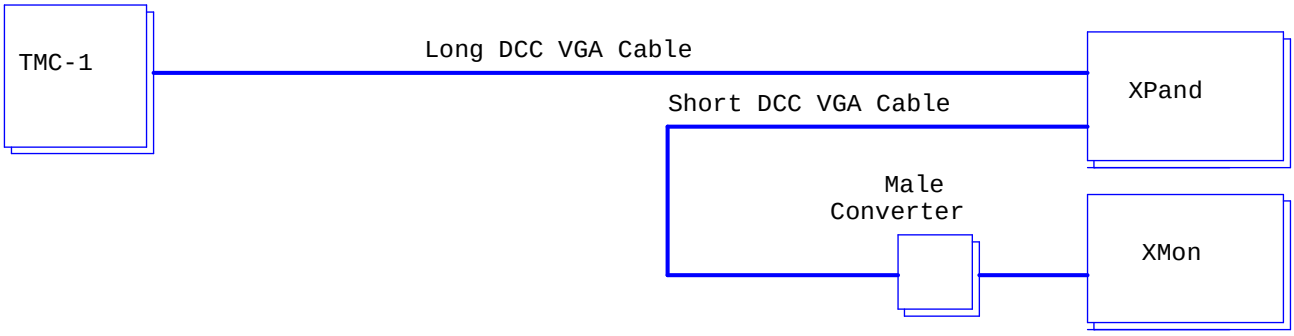

Using existing Avid Cable

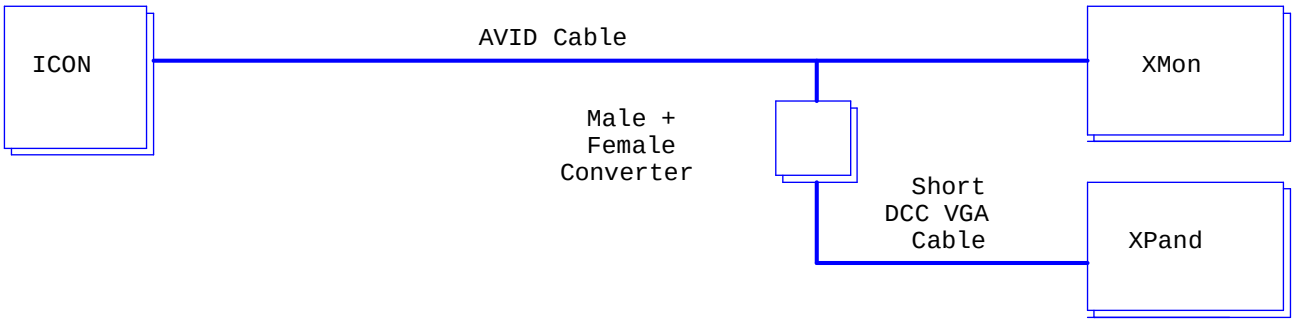

XPand Audio Input/Output Connections

Input Connections (25 pin 'D')							
Channel	**(+)**	**(-)**	**Gnd**	**8 Channel**	**7.1.4**	**9.1.4**	
1	24	12	25	1	Top Front Left	Front side Left	
2	10	23	11	2	Top Front Right	Front Side Right	
3	21	9	22	3	Top Rear Left	Top Left	
4	7	20	8	4	Top Rear Right	Top Right	
5	18	6	19	5	Left side	Left side	
6	4	17	5	6	Right side	Right side	
7	15	3	16	7	Left back	Left back	
8	1	14	2	8	Right back	Right back	
Gnd			13				

Output Connections (25 pin 'D')							
Channel	**(+)**	**(-)**	**Gnd**	**8 Channel**	**7.1.4**	**9.1.4**	
1	24	12	25	1	Top Front Left	Front side Left	
2	10	23	11	2	Top Front Right	Front Side Right	
3	21	9	22	3	Top Rear Left	Top Left	
4	7	20	8	4	Top Rear Right	Top Right	
5	18	6	19	5	Left side/Left Sub	Left side/Left Sub	
6	4	17	5	6	Right side/Right Sub	Right side/Right Sub	
7	15	3	16	7	Left back	Left back	
8	1	14	2	8	Right back	Right back	
Gnd			13				

Internal Links

The two internal links shown below are used to connect Outputs 5 and 6 to :

- Away from edge: Inputs 5 and 6
- Next to edge: Surround Bass Extension, Low pass sum of left and right surround channels.

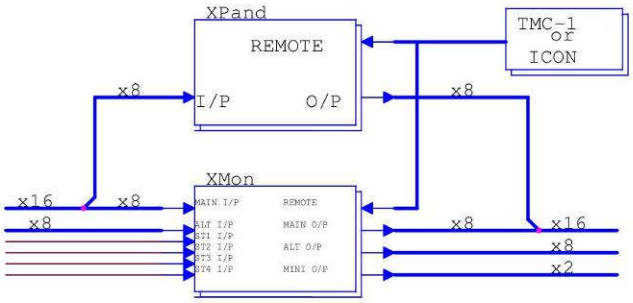

5.1/7.1/7.1.4

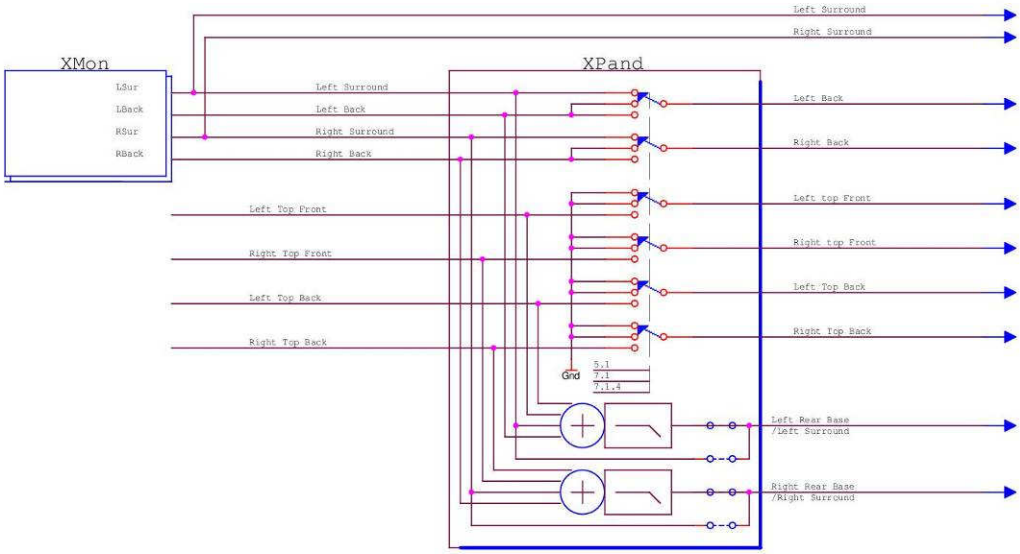

5.1/7.1/9.1.2

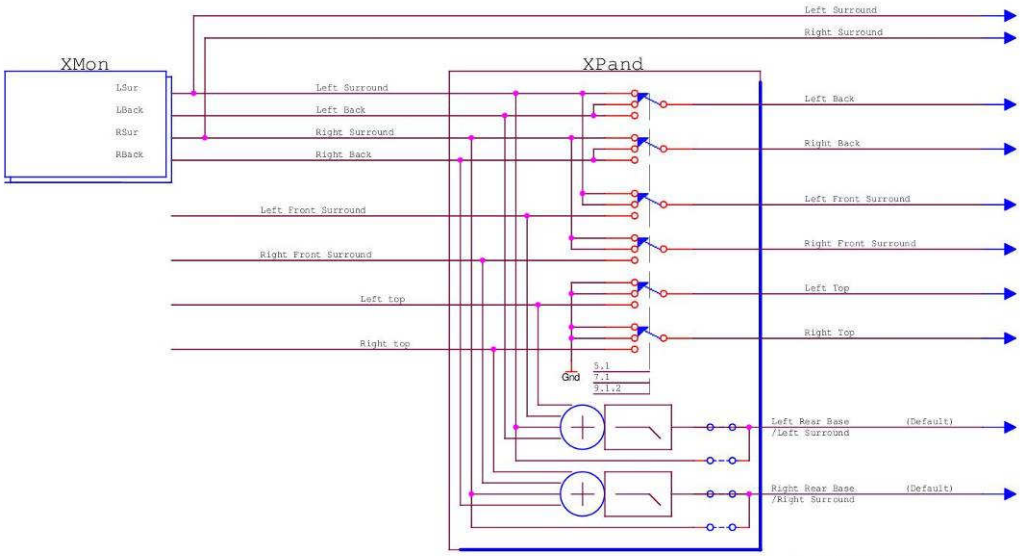

CB ELECTRONICS

Loddonside, Lands End House
Beggars Hill Road, Charvil,
Berks. RG10 0UD. England
TEL +44 (0)118 9320345, FAX (0)118 9320346

Size	Document Number	Rev
D	AMON/XPAND	A

Date: Friday, April 01, 2016 Sheet 0 of 0

Glossary

Listen 1, Listen 2

Listen back channels, microphones installed in the Studio, machine room or overdub booth which can be monitored on the control room speakers.

L/B1, L/B2, L/B 1+2

Listen back channels 1 and/or 2 are enabled

T/B 1, T/B 2, T/B 1+2

Talkback channels 1 and/or 2 are enabled,

Mono

Mono is enabled: The mono attenuator is enabled, user programmable attenuation from 0dB to 4dB in 0.5dB steps.

SLS-A, SLS-B

SLS = Studio Loudspeaker

There are two user keys associated with the Studio Loudspeakers SLS Mute and SLS A/B, SLS A/B allows you to switch quickly between two Studio Loudspeaker Selections

Fn-1, Fn-2, Fn-3

Keys 9, 10, 11 User assignable Function Keys

DMix

Stereo sum of L+R+C+Ls+Rs+Lb+Rb

H.Mute

Hardware Mute: the Hardware mute GPO is active to drive mute relays on the power amp inputs to protect your speakers and ears from digital noise and power on/off clicks

Default Input names

Main ip, Alt ip , St-1…St4

Default Speaker Set Names

Main, Alt, Mini

CB Electronics

CB Electronics has made every effort to ensure the accuracy of information contained within this document, which is nevertheless supplied for information purposes only and does not constitute any form of warranty or guarantee.

All trademarks acknowledged.

The information in this document is subject to change without notice.

CB Electronics
Loddonside, Lands End House
Beggars Hill Road
Charvil
Berkshire RG10 0UD
Tel: +44 (0)118 9320345
Fax: +44 (0)118 9320346
Email: support@colinbroad.com
Tech Support: +44 (0)118 9320345
Web: www.colinbroad.com